# Requirements for Temporary Food Events

IOWA DEPARTMENT OF
INSPECTIONS & APPEALS
321 E 12th Street
Des Moines, IA 50319
515-281-6538

## Food that is provided to the public is subject to regulation.

***"Food"*** means a raw, a cooked, or a processed edible substance, ice, a beverage (including alcoholic beverages), or an ingredient used- or intended for use or sale, in whole or in part- for human consumption.

***"Vending"*** means selling individual portions of food for immediate consumption.

**LICENSE REQUIREMENTS**

**When is a license needed?**

- Providing unpackaged food or beverages. Examples- tacos, burgers, lemonade, etc.
- Providing commercially prepared pre-packaged food or beverage that requires temperature control for safety. Examples- ice cream bars, milk, yogurt, etc.
- Cut fruits- Examples- cut watermelon, cantaloupe, and honeydew melons.

**When is a license *not* needed?**

- Commercially prepared pre-packaged food or beverage that does not require temperature control for safety. Examples- bottled drinks, packaged candy, packaged chips, packaged granola bars, etc.

- Whole, uncut fruits and vegetables

- Sampling- Food or beverage that is being sampled- and not sold- *is still subject to regulation* (proper handwashing, temperature control, etc.) but In some cases may *not required to be licensed*. Check with your Regulatory Authority.

**<u>WHAT TYPE OF LICENSE IS NEEDED?</u>**

***License Types:***

**Mobile Food License** (Annual License)– may be used up to 3 days in a single location before the unit has to move.

**Food Service or Retail License** (Annual License)– may only be used on the premises for which the license was issued. *A licensed establishment may set up a food stand on their own premises without an additional food license requirement. *Leaving the establishment's property to vend food requires additional licensure.*

**Temporary Food License** (single use license)– used in conjunction with a single event, and may be used up to 14 consecutive days in conjunction with that event at a single location.

- An "event or celebration" *is* a significant occurrence or happening sponsored by a civic, a business, an educational, a government, a community, or a veterans' organization, or a flea market that operates periodically for no more than 14 days and may include athletic contests.
- An "event or celebration" *does not include* vending food at a brewery or bar, or at single store's grand opening or sale.

**<u>OBTAINING A LICENSE IS EASY</u>**

Contact your Regulatory Authority
https://dia.iowa.gov/food-and-consumer-safety-bureau

Print the application and mail it in (Ensure that you print and mail the application to the appropriate Regulatory Authority.)
*To obtain an application to the Iowa Department of Inspections and Appeals:*
https://dia.iowa.gov/food-consumer-safety/food-safety-license-applications

# *Let's focus on Temporary Food Events

## TEMPORARY FOOD SERVICE LICENSE

**WHO MUST PURCHASE**

- For-profit organizations and individuals
- Non-profit organizations who do not meet exemption requirements

**COST**

- $33.50 per permit
- No online payment service is available
- Application must be submitted to the Regulatory Authority 72 hours prior to the event for approval. (2 weeks prior to the event is preferred to ensure that the application is properly reviewed.)

***Non-Profit Exemption Examples:***

**License Required**

- A nonprofit group sets up a food stand in downtown business district for one day. The premises or property is not owned by the nonprofit group.

**License Not Required**

- Nonprofit group prepares and serves meal at a location that is regularly used by them. (i.e. church) The meal is served only on one day of the week. (2 times/year they can serve food for up to 3 days.)
- Nonprofit group uses the premises of another nonprofit group to serve a meal. May only be done twice per year and for one day each time.

## NON-TRADITIONAL/TICKETED EVENTS

Contact your Regulatory Authority regarding requirements for Non-Traditional or Ticketed Events. *Examples- Wine and Beer Expos, Chili Cook-offs, BBQ Contests*

## FOOD SUPPLIES

All food supplies shall be obtained from a licensed or approved source (with the exception of honey). All meat and poultry products *must* be either Federal or Iowa inspected products.
The use of foods in hermetically sealed containers that are not prepared in a licensed food processing establishment is prohibited.
All fruits and vegetables must be washed before being used or sold.
Receipts for all prepared food and ingredients must be available for review at the event location.

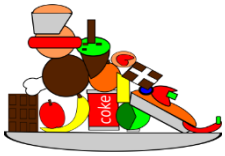


**Food items approved for sale at temporary events:**

• Food items prepared on site, from start to finish, the day of the event in the licensed food stand
• Food items that have been prepared in the food stand owner's licensed facility (off site from the event), and transported to event
• All food served at temporary events must come from an approved (licensed) facility

**NON-APPROVED FOODS WILL BE PLACED ON HOLD AND NOT PERMITTED TO BE SOLD. THIS INCLUDES MEATS LABELED "NOT FOR SALE" AND <u>ALL</u> FOODS PREPARED IN AN UNLICENSED KITCHEN.**
***Exception**- Non-Profit Organizations may provide non-potentially hazardous foods (foods that don't require temperature control for safety) that are obtained from any source. *Example*- Church members can bake cookies at home and sell them at the bake sale

**PERSONNEL**

- All employees, including volunteers, shall be under the direction of a designated person in charge at all times of operation.
- The person in charge shall ensure that all food handlers are following the Temporary Food Stand Requirements.
- Every employee and volunteer must sign a logbook with their name, address, telephone number, and the date and hours worked. This logbook must be maintained by the person in charge for 30 days.
- All food handlers shall be free of contagious or communicable diseases, sores, or infected wounds; must keep themselves and their clothing clean; and must keep their hair properly restrained.
- Tobacco use of any kind is not permitted inside the stand or while attending grills outside the stand.
- No eating or drinking is allowed in food preparation areas.
- Personal belongings shall be stored in a designated place adequately separated from food, food contact surfaces, and dishwashing areas.

## **GOOD HYGIENIC PRACTICES AND TEMPERATURE CONTROL ARE OF EXTREME IMPORTANCE TO PREVENT FOODBORNE ILLNESS!

**HANDWASHING**

Hands must be washed at the designated handwashing station as frequently as necessary to maintain good sanitation. Always wash hands before beginning work and after going to the restroom, eating, taking breaks, handling garbage, handling raw meat, or using tobacco products.

**HANDWASHING STATION REQUIREMENTS**

1. An accessible and functional handwashing facility shall be provided within the perimeter of any business involved in the sale of food. Grill areas that are separate from other food handling areas should have a separate handwashing station. If only pre-packaged food products are sold, handwashing facilities are not required, i.e., canned pop, boxed candy, packaged snack foods.

2. Handwashing facilities shall not be used for the cleaning of equipment, storage of wiping cloths, or the disposal of liquid waste.

3. All food products, cooking equipment and serving utensils shall be protected from splash or spillage caused by handwashing.

4. Disposable paper towels shall be provided with each handwashing facility, and will be properly disposed of after being used.

5. Any one of the following set-ups can be used as a handwashing facility in a temporary stand setup:
   - Portable commercial hand sinks that produce water flow within 10 seconds of activating a hand pump or opening a dispensing valve. Soap from a sanitary dispenser and paper towels shall be provided.
   - Minimum of 5 gallons of potable water will be maintained in a container capable of dispensing water through a valve or spout. This valve or spout shall enable a constant flow of water when opened. The waste water shall be collected in another container and disposed of in a sanitary sewer. Soap from a sanitary dispenser and paper towels shall be provided.

6. An accessible hand sink shall accompany any toilet utilized by food handlers. Soap from a sanitary dispenser and disposable single-use towels shall be provided.
The sink shall be used for handwashing only. Handwashing facilities shall be checked regularly for adequate soap, towels, and water.

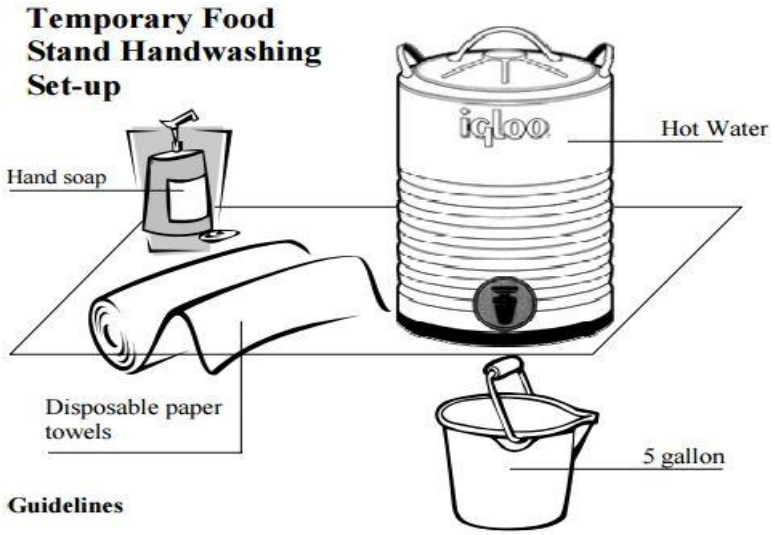


***HANDWASHING STATIONS AND SANITIZER BUCKETS WITH WIPING CLOTHS MUST BE SET UP AND USED PRIOR TO ANY FOOD HANDLING, PREPARATION, OR SALES.**

**<u>WAREWASHING, SANITIZERS AND WIPING CLOTHS</u>**

- Chlorine bleach or another approved sanitizer shall be provided for warewashing and wiping cloths.
- Wiping cloths shall be provided for wiping counters, tables and other food contact surfaces. Cloths shall be rinsed frequently and stored in a clean sanitizer solution between uses.
- Sanitizing solutions shall be of an appropriate concentration. Chlorine sanitizer should be mixed to 50ppm-100ppm, quaternary ammonium sanitizers should be mixed to 200ppm or as specified on manufacturer's instructions. All other sanitizers must be mixed to manufacturer's specifications.
- Test strips are required for checking sanitizer levels.
- Sanitizing solution shall be changed as needed to maintain the solution in a clean condition.

<u>Warewashing (utensil washing)</u>

- Three 5-gallon (minimum) containers of water large enough to fit largest utensil.
- First container should contain soapy water for washing. Second container should contain fresh clean water for rinsing. Third container should contain a sanitizer & water solution for sanitizing.
- Container contents shall be changed as needed to maintain the water and solutions in a clean condition.

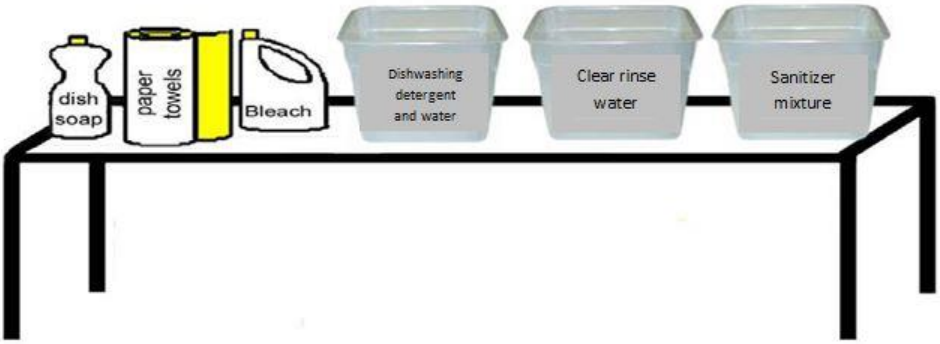

## ILL FOOD HANDLERS

• Cover lesions on the hands or wrist with an impermeable finger cot or stall and with a single-use glove.
• Exclude employees with a diagnosed foodborne illness (such as Norovirus, Salmonella, Shigella, E. coli 0157:H7 or Hepatitis A) or sudden onset of vomiting or diarrhea, from the establishment.
• Exclude or Restrict employees from working with exposed food or clean equipment, utensils, linen, and unwrapped single service and single-use articles when the following symptoms are present:

1) Vomiting
2) Diarrhea
3) Jaundice
4) Sore throat with fever
5) Open/draining lesions

## FOOD PREPARATION AND FOOD HANDLING

- Bare hand contact with ready-to-eat food is prohibited. Food handlers should limit direct hand contact with all foods as much as possible with the use of tongs, deli tissues, gloves, and other utensils.
- All food preparation and contact surfaces must be of a safe design with durable, smooth, and easily-cleanable surfaces.
- Food must be thawed, reheated, and cooled using procedures approved in the Food Code.

## COOKING AND STORAGE TEMPERATURES

All potentially hazardous foods shall be refrigerated at 41°F or less or held at 135°F or higher. All cooling units must be equipped with an accurate, easily-visible thermometer. An accurate metal stem food thermometer must be provided to check storage and cooking temperatures. Cooking temperatures for meat products and reheating must be as follows:

| | |
|---|---|
| Poultry and ground poultry | 165°F or higher |
| All other ground meats | 155°F or higher |
| Pork and fish | 145°F or higher |
| Whole Muscle Beef Steaks and Roasts | 145°F or higher |
| Reheated or microwaved items | 165°F or higher |
| Hot Holding | 135°F or higher |
| Cold Holding | 41°F or lower |

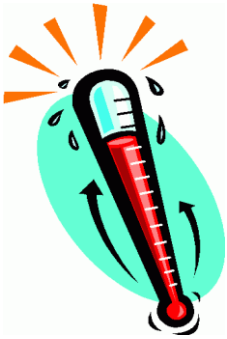

*If raw or undercooked animal foods such as meat, eggs, or fish are served, a consumer advisory as required by the Food Code must be conspicuously posted or included in the menu.

## FOOD AND FOOD CONTACT ITEM STORAGE

- All food supplies and food contact items shall be stored off of the ground, and shall be properly covered to be protected from dust, rain or other contamination.
- Potentially hazardous foods must meet temperature requirements as previously stated.
- Leftover cooked food must be discarded at the end of each day and cannot be reused.

**FOOD AND CONDIMENT DISPLAY**

- Condiment stations must be located in an area where they may be constantly monitored.
- All foods on display shall be covered or individually packaged and meet appropriate temperature requirements.
- All food must be protected from customer handling, coughing or sneezing, and other contamination by wrapping, sneeze guards, or other effective means.

- The public is not allowed to serve itself from opened and uncovered containers of food.
- Sugar, ketchup, mustard and other condiments must be individually packaged or dispensed from closed squeeze, pour, or pump type dispensers.

**ICE**

- Ice shall be obtained from an approved source.
- Food that is not sealed in packaging shall not be stored in contact with water or ice.
- Packaged food or canned and bottled beverages may be stored in ice bins that are continuously drained.
- Ice that has been used for cooling or keeping food or beverage containers cold may not be reused in beverages provided to customers.
- Beverage ice shall be stored in the bag in which it is purchased or in clean, properly constructed ice storage units which are easily cleanable, and kept drained.
- Ice shall be dispensed with scoops, tongs, or other utensils with a handle, *not with hands or drink cups.*

**WATER SUPPLY AND STORAGE**

- An adequate supply of clean water from an approved source must be provided for food preparation, utensil and equipment washing, wiping cloths, and hand washing.
- Water storage units and hoses must be made from food grade material and used only for potable water.
- Water supply systems shall be protected against backflow or contamination.

**EATING AND DRINKING UTENSILS**

- Use disposable single-service plates, cups and utensils.
- If approved, reusable eating or drinking utensils (such as commemorative cups) must be washed, rinsed, sanitized and air dried using clean hot water and three basins large enough for immersion of the dishes.

**COOKING, PREPARATION AND SERVICE UTENSILS**

- All equipment and cooking utensils must be maintained in a sanitary manner.
- A three compartment operation may be required for washing, rinsing and sanitizing. This requirement may be waived depending on the menu and the number of utensils being utilized by the operator.

## WASTE WATER AND GARBAGE DISPOSAL

- Waste water must be disposed of in an approved manner.
- Water or melting ice shall not create a wet or muddy area around the stand.
- An adequate number of covered trash containers shall be provided at each stand.
- It shall be the responsibility of the food stand operator to keep the area around their stand free of food scraps, paper and other trash.

## STAND CONSTRUCTION

- Stands shall be constructed to include overhead shelter to protect food.
- If required, side screening shall be provided to protect from insects, dust, and weather.
- If required, floors shall be constructed of wood, asphalt, rubber or plastic matting to control dust, mud, and insects.
- Adequate lighting shall be provided, and lights above exposed food preparation areas must be shielded or shatterproof.

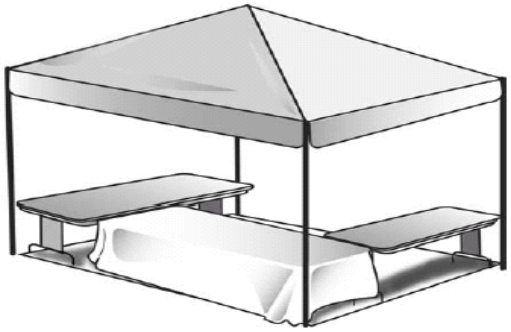

## OPERATING A TEMPORARY FOOD STAND WITHOUT A LICENSE

- A Temporary Food License must be obtained prior to set up and serving food at a temporary event.
- Food vendors that are operating without proper licensure will be required to stop serving food while a temporary food license application is filled out and an inspection is conducted at the food stand.
- A double license fee will be collected for each food stand operating without an appropriate license.

## QUESTIONS??

For questions- contact your Regulatory Authority (listed by county)
https://dia.iowa.gov/food-and-consumer-safety-bureau

## ADDITIONAL RESOURCES:

Temporary Event Coordinator Questionnaire (to be submitted to your inspector)

Temporary Food Vendor Checklist (to be used by Vendors)

Temporary Food Handwashing

Iowa Administrative Rules for Temporary Food Establishments